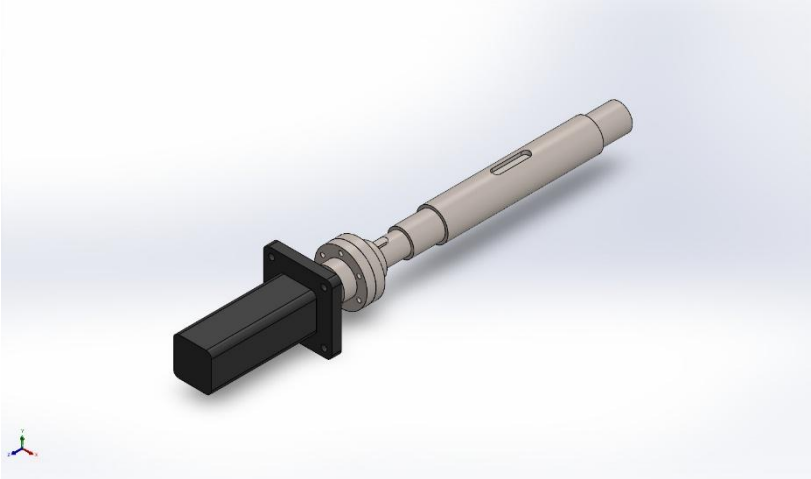

Simulation of Motor and motor bracket

Date: April 20, 2026
Designer: Solidworks
Study name: Frequency 1
Analysis type: Frequency

Table of Contents

Description 1
Assumptions 2
Model Information 3
Study Properties 5
Units 6
Material Properties 6
Loads and Fixtures 7
Connector Definitions 8
Interaction Information 8
Mesh information 9
Sensor Details 10
Study Results 11
Conclusion 32

Description

No Data

Assumptions

Model Information

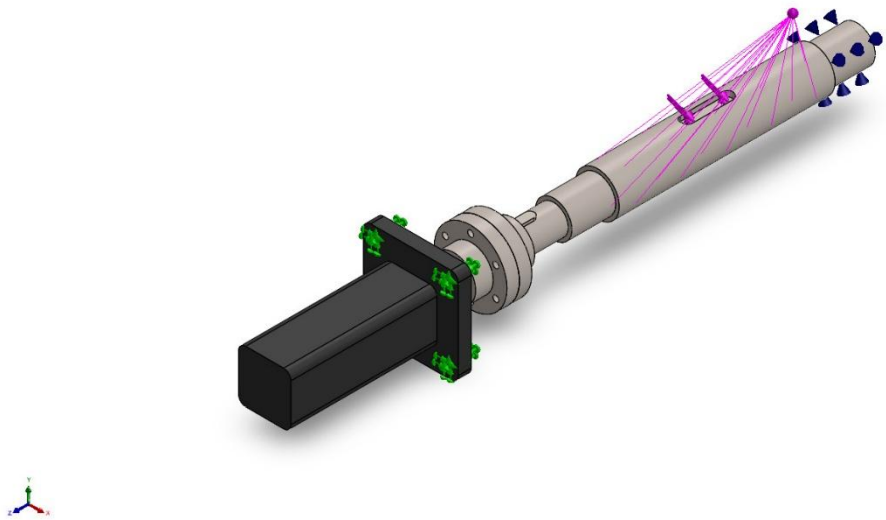

Model name: Motor and motor bracket
Current Configuration: Default

Solid Bodies

Document Name and Reference	Treated As	Volumetric Properties	Document Path/Date Modified
Imported1 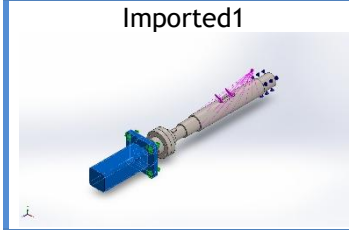	Solid Body	**Mass:1.31215 kg** **Volume:0.000182243 m^3** **Density:7,200 kg/m^3** **Weight:12.8591 N**	**C:\Users\26869\Desktop\game\Solidwork\resource\model\第 44-46、50、53 课\Motor and motor bracket\Motor and motor bracket.SLDPRT**
Imported2 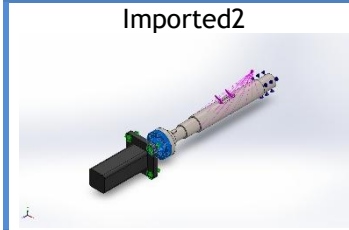	Solid Body	**Mass:0.153275 kg** **Volume:1.99058e-05 m^3** **Density:7,700 kg/m^3** **Weight:1.50209 N**	**C:\Users\26869\Desktop\game\Solidwork\resource\model\第 44-46、50、53 课\Motor and motor bracket\Motor and motor bracket.SLDPRT**
Imported3 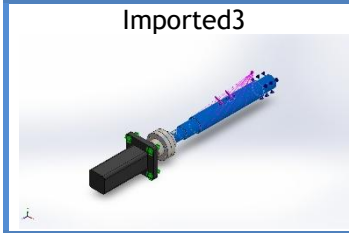	Solid Body	**Mass:1.12653 kg** **Volume:0.000146303 m^3** **Density:7,700 kg/m^3** **Weight:11.04 N**	**C:\Users\26869\Desktop\game\Solidwork\resource\model\第 44-46、50、53 课\Motor and motor bracket\Motor and motor bracket.SLDPRT**
Imported4	Solid Body	**Mass:0.00617056 kg** **Volume:8.01372e-07 m^3** **Density:7,700 kg/m^3** **Weight:0.0604715 N**	**C:\Users\26869\Desktop\game\Solidwork\resource\model\第 44-46、50、53 课\Motor and motor bracket\Motor and motor bracket.SLDPRT**

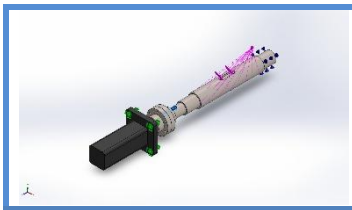			
Imported5 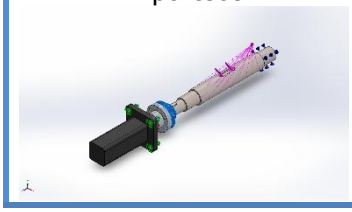	Solid Body	**Mass:0.138284 kg** **Volume:1.7959e-05 m^3** **Density:7,700 kg/m^3** **Weight:1.35519 N**	**C:\Users\26869\Desktop\game\Solidwork\resource\model\第 44-46、50、53 课\Motor and motor bracket\Motor and motor bracket.SLDPRT**

Study Properties

Study name	Frequency 1
Analysis type	Frequency
Mesh type	Solid Mesh
Number of frequencies	20
Decouple the mixed free body modes	Off
Solver type	FFEPlus
Soft Spring:	Off
Incompatible bonding options	Automatic
Thermal option	Include temperature loads
Zero strain temperature	298 Kelvin
Include fluid pressure effects from SOLIDWORKS Flow Simulation	Off
Result folder	SOLIDWORKS document (C:\Users\26869\Desktop\game\Solidwork\resource\model\第 44-46、50、53 课\Motor and motor bracket)

Units

Unit system:	SI (MKS)
Length/Displacement	mm
Temperature	Kelvin
Angular velocity	Rad/sec
Pressure/Stress	N/m^2

Material Properties

Model Reference	Properties	Components
	Name: Gray Cast Iron **Model type:** Linear Elastic Isotropic **Default failure criterion:** Mohr-Coulomb Stress **Tensile strength:** 1.51658e+08 N/m^2 **Mass density:** 7,200 kg/m^3 **Elastic modulus:** 6.61781e+10 N/m^2 **Poisson's ratio:** 0.27 **Thermal expansion coefficient:** 1.2e-05 /Kelvin	SolidBody 1(Imported1)(电机支架)
Curve Data:N/A		
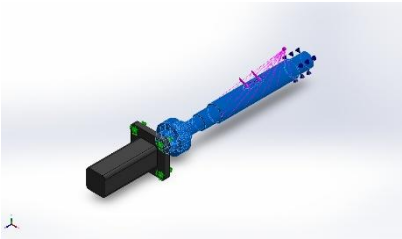	**Name:** Alloy Steel **Model type:** Linear Elastic Isotropic **Default failure criterion:** Max von Mises Stress **Yield strength:** 6.20422e+08 N/m^2 **Tensile strength:** 7.23826e+08 N/m^2 **Mass density:** 7,700 kg/m^3 **Elastic modulus:** 2.1e+11 N/m^2 **Poisson's ratio:** 0.28 **Thermal expansion coefficient:** 1.3e-05 /Kelvin	SolidBody 2(Imported2)(电机支架), SolidBody 3(Imported3)(电机支架), SolidBody 4(Imported4)(电机支架), SolidBody 5(Imported5)(电机支架)
Curve Data:N/A		

Loads and Fixtures

Fixture name	Fixture Image	Fixture Details
Fixed-1	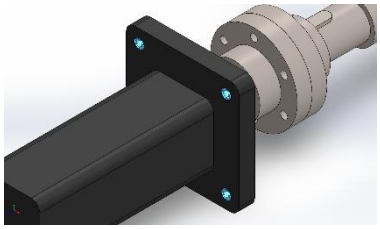	**Entities:** 4 face(s) **Type:** Fixed Geometry

Load name	Load Image	Load Details
Torque-1	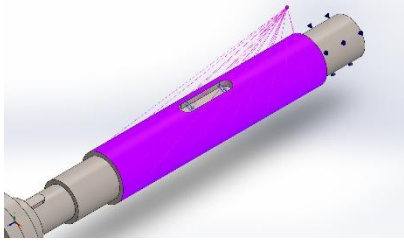	**Entities:** 1 face(s) **Reference:** Face< 1 > **Type:** Apply torque **Value:** 100 N.m
Remote Load/Mass (Rigid connection)-1	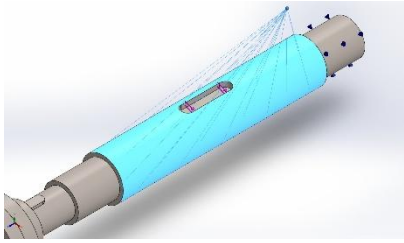	**Entities:** 1 face(s) **Type:** Load/Mass (Rigid connection) **Coordinate System:** Global cartesian coordinates **Force Values:** ---, ---, --- N **Moment Values:** ---, ---, --- N.m **Reference coordinates:** 800 150 50 mm **Remote Mass:** 100 kg **Moment of Inertia:** 0,0,0,0,0,0 kg.m^2 **Components transferred:** NA

Connector Definitions

Pin/Bolt/Bearing Connector

Model Reference	Connector Details	Strength Details
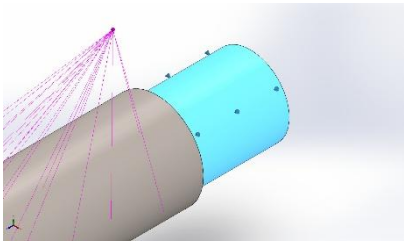 Bearing Support-1	**Entities:** 1 face(s) **Type:** Bearing	No Data
Connector ForcesNo Data		

Interaction Information

Interaction	Interaction Image	Interaction Properties
Component Interaction-3	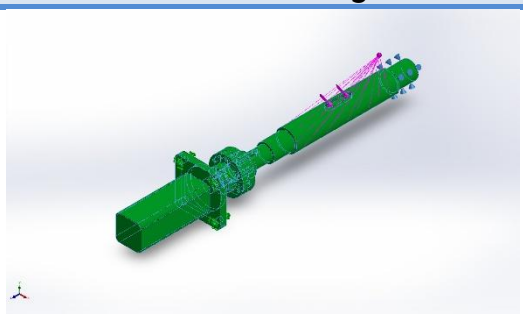	**Type:** Bonded **Components:** 5 Solid Body (s) **Options:** Independent mesh

Mesh information

Mesh type	Solid Mesh
Mesher Used:	Blended curvature-based mesh
Jacobian points for High quality mesh	16 Points
Maximum element size	14.3257 mm
Minimum element size	1.53073 mm
Mesh Quality	High

Mesh information - Details

Total Nodes	35965
Total Elements	21287
Maximum Aspect Ratio	8.4073
% of elements with Aspect Ratio < 3	96.2
Percentage of elements with Aspect Ratio > 10	0
Percentage of distorted elements	0
Time to complete mesh(hh;mm;ss):	00:00:02
Computer name:	REMY

Mesh Quality Plots

Name	Type	Min	Max
Quality1	Mesh	-	-

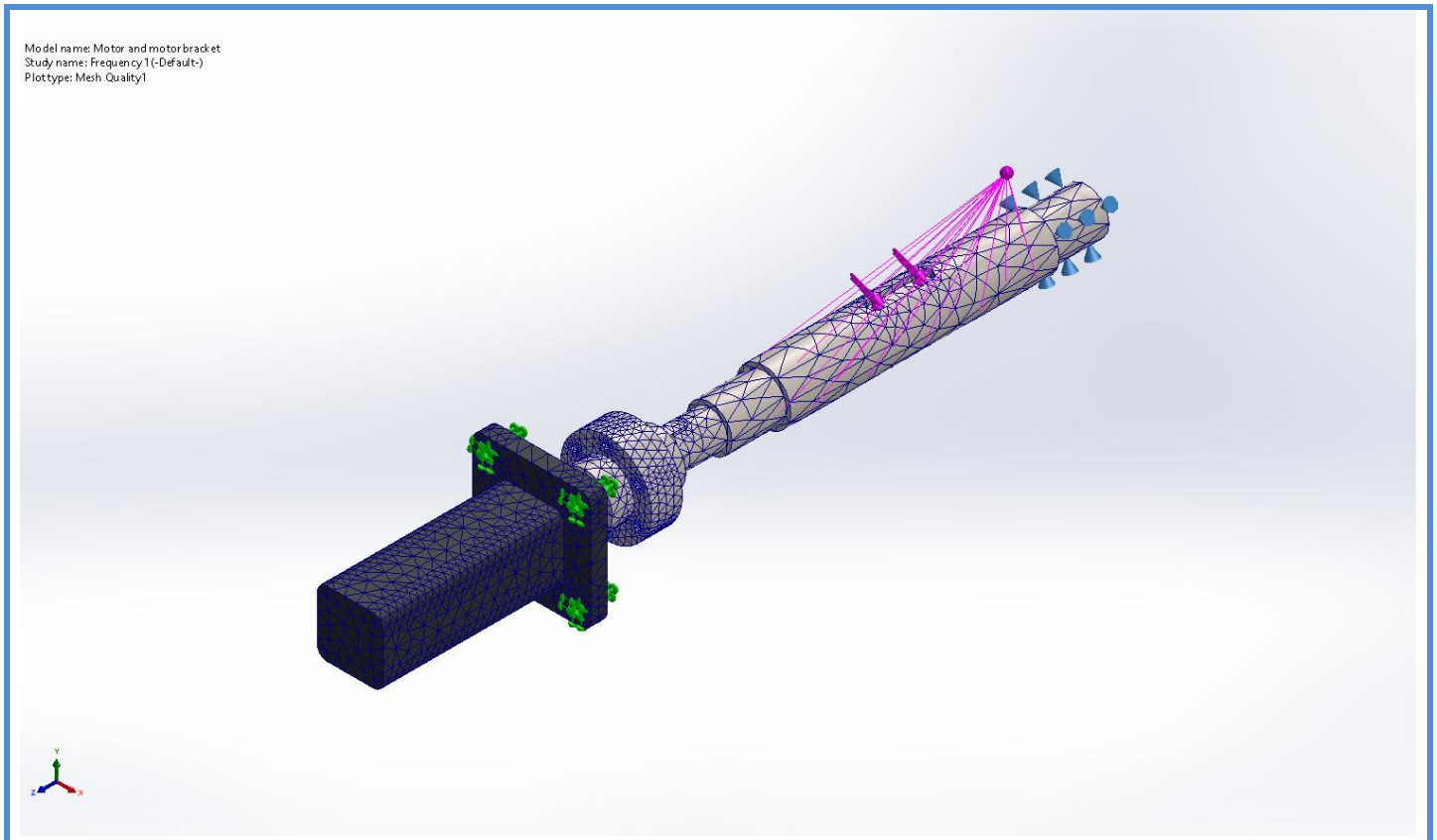

Motor and motor bracket-Frequency 1-Quality-Quality1

Sensor Details

No Data

Study Results

Name	Type	Min	Max
Amplitude1	AMPRES: Resultant Amplitude Plot for Mode Shape: 1(Value = 7.26854 Hz)	0.000e+00 Node: 1	1.047e-02 Node: 33173

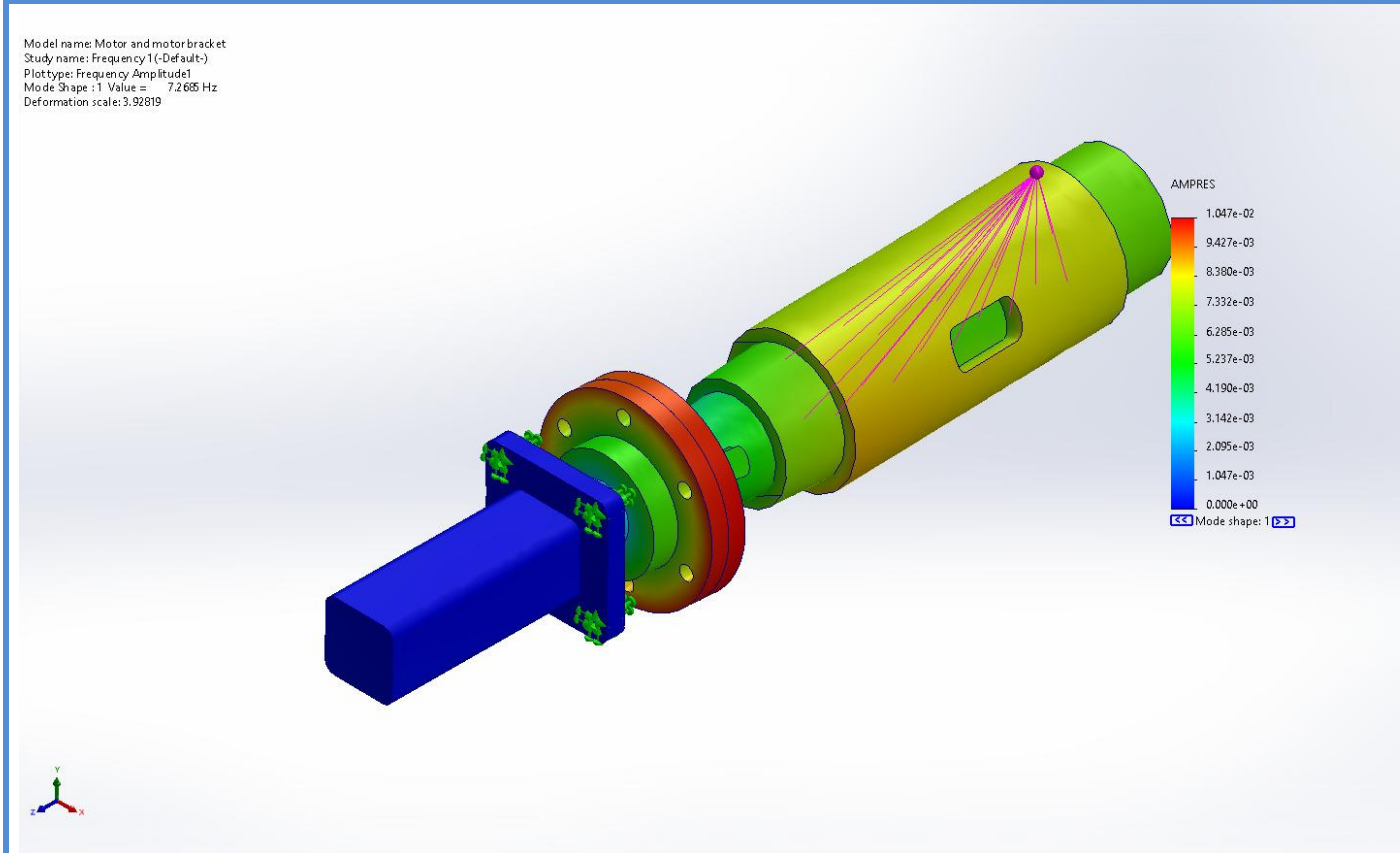

Motor and motor bracket-Frequency 1-Amplitude-Amplitude1

Name	Type	Min	Max
Amplitude2	AMPRES: Resultant Amplitude Plot for Mode Shape: 2(Value = 48.9592 Hz)	0.000e+00 Node: 1	7.343e-02 Node: 24629

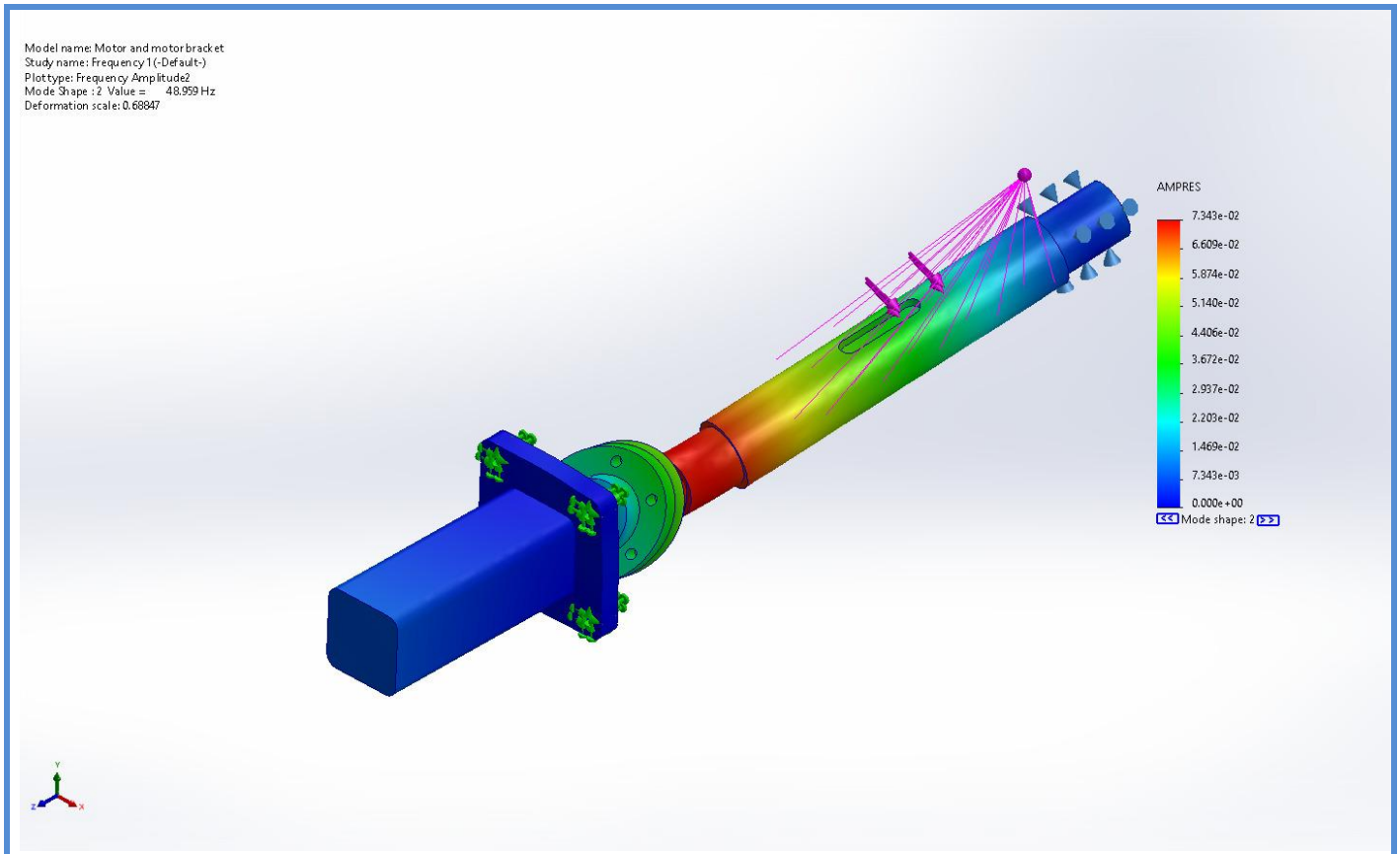

Motor and motor bracket-Frequency 1-Amplitude-Amplitude2

Name	Type	Min	Max
Amplitude3	AMPRES: Resultant Amplitude Plot for Mode Shape: 3(Value = 889.754 Hz)	0.000e+00 Node: 1	1.362e+00 Node: 26385

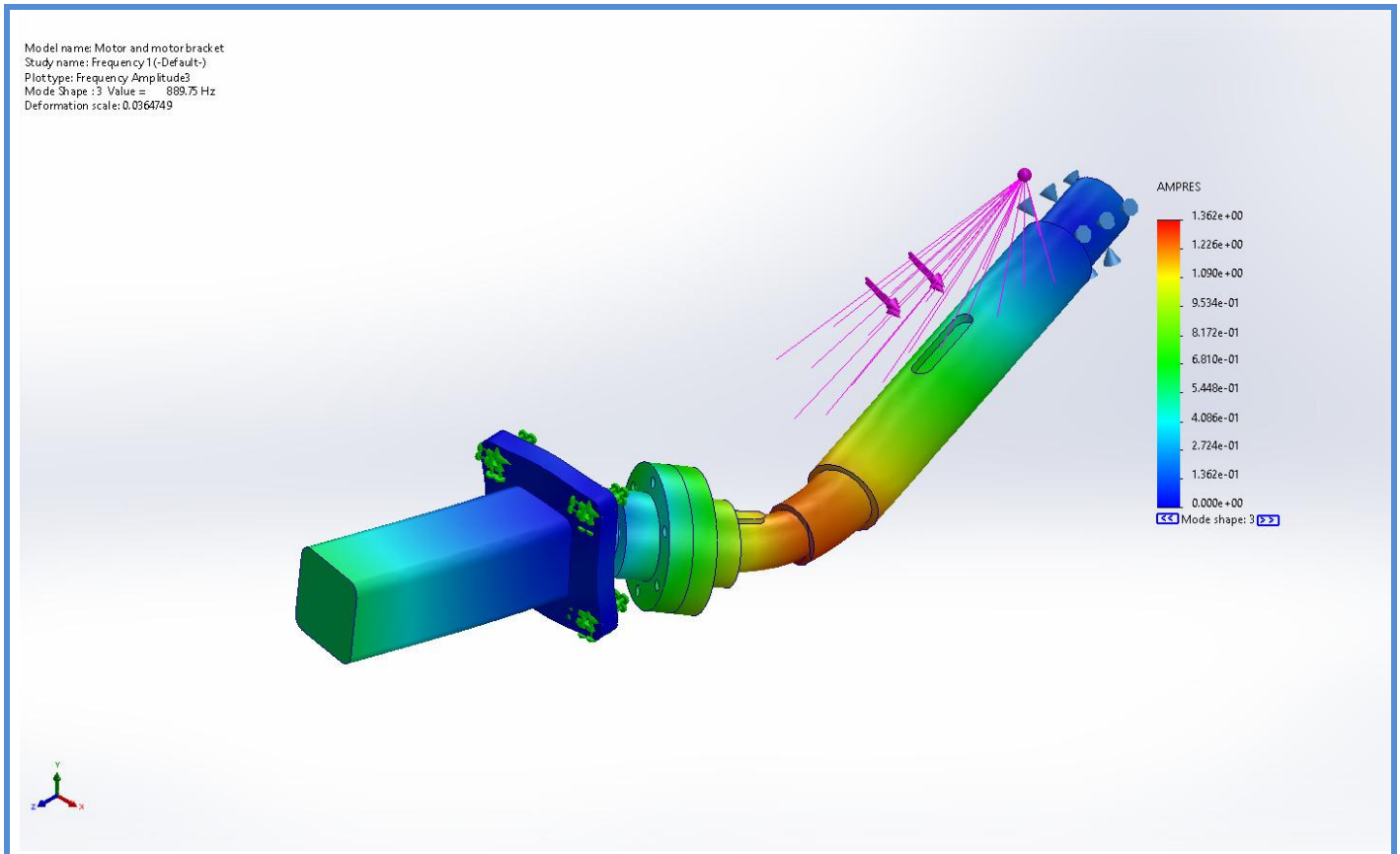

Motor and motor bracket-Frequency 1-Amplitude-Amplitude3

Name	Type	Min	Max
Amplitude4	AMPRES: Resultant Amplitude Plot for Mode Shape: 4(Value = 1,065.94 Hz)	0.000e+00 Node: 1	1.896e+00 Node: 1138

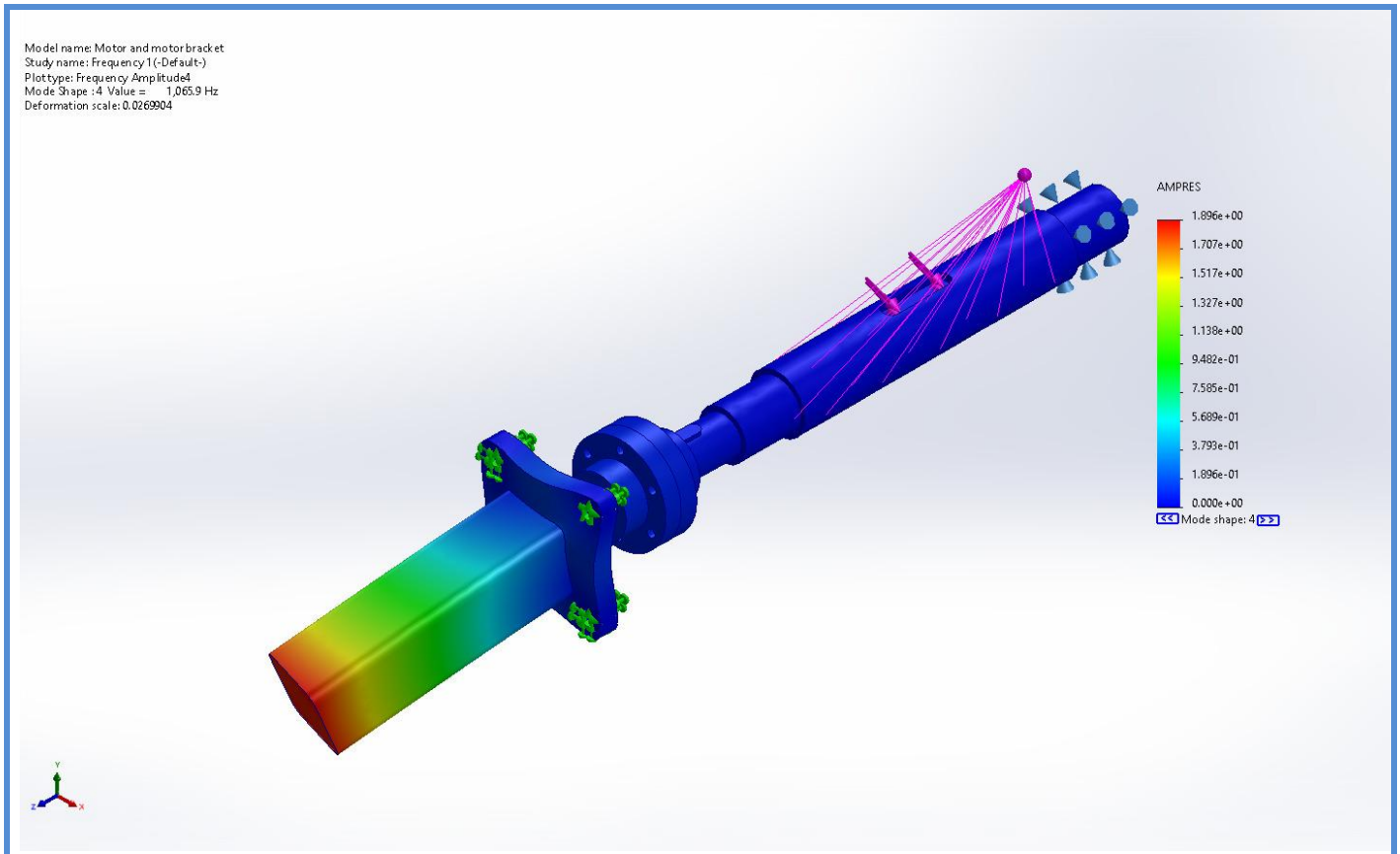

Motor and motor bracket-Frequency 1-Amplitude-Amplitude4

Name	Type	Min	Max
Amplitude5	AMPRES: Resultant Amplitude Plot for Mode Shape: 5(Value = 1,085.06 Hz)	0.000e+00 Node: 1	1.817e+00 Node: 1135

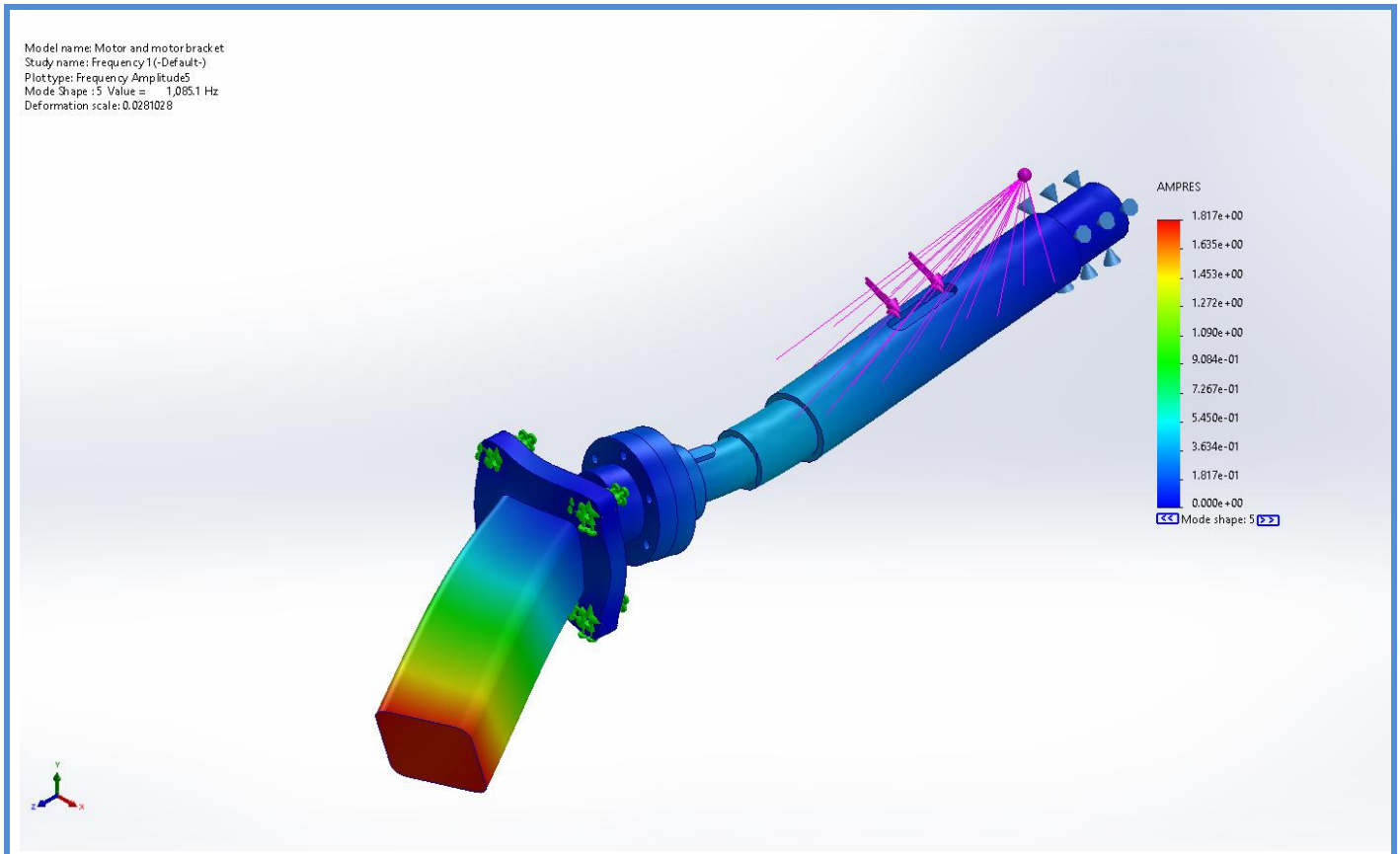

Motor and motor bracket-Frequency 1-Amplitude-Amplitude5

Name	Type	Min	Max
Amplitude6	AMPRES: Resultant Amplitude Plot for Mode Shape: 6(Value = 1,099.75 Hz)	0.000e+00 Node: 1	1.504e-01 Node: 12928

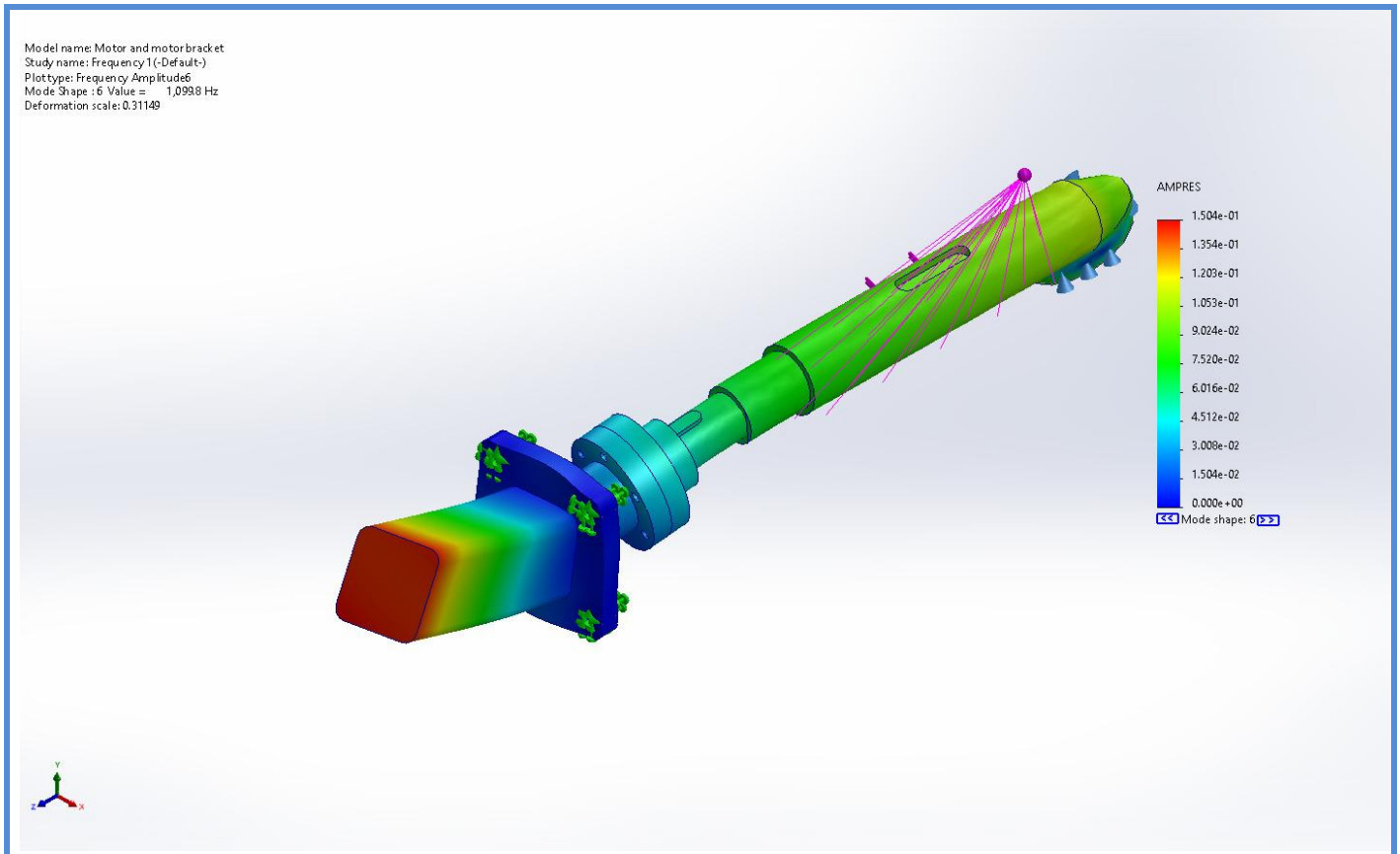

Motor and motor bracket-Frequency 1-Amplitude-Amplitude6

Name	Type	Min	Max
Amplitude7	AMPRES: Resultant Amplitude Plot for Mode Shape: 7(Value = 3,254.49 Hz)	0.000e+00 Node: 1	2.704e+00 Node: 27638

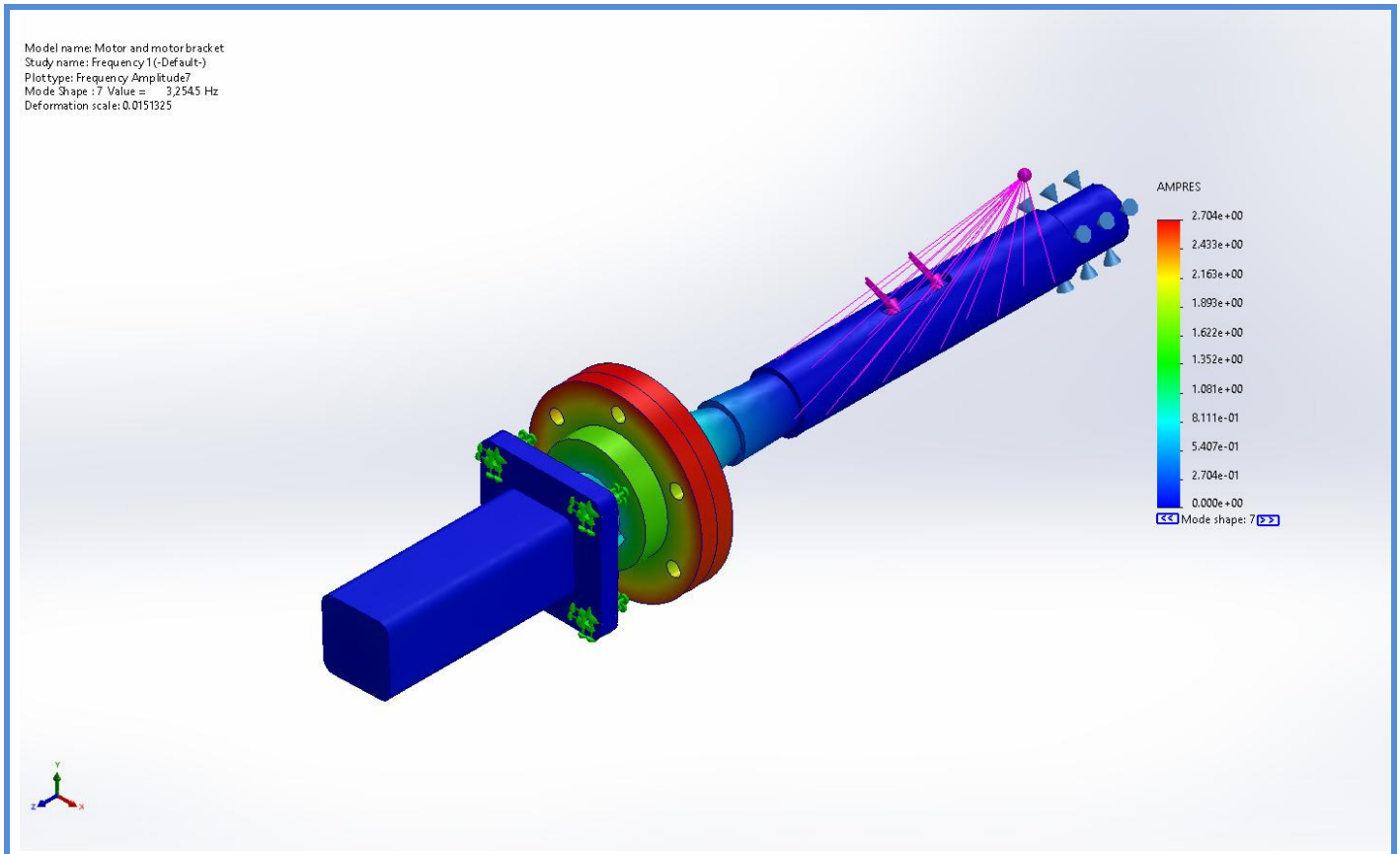

Motor and motor bracket-Frequency 1-Amplitude-Amplitude7

Name	Type	Min	Max
Amplitude8	AMPRES: Resultant Amplitude Plot for Mode Shape: 8(Value = 3,661.3 Hz)	0.000e+00 Node: 1	1.656e+00 Node: 27669

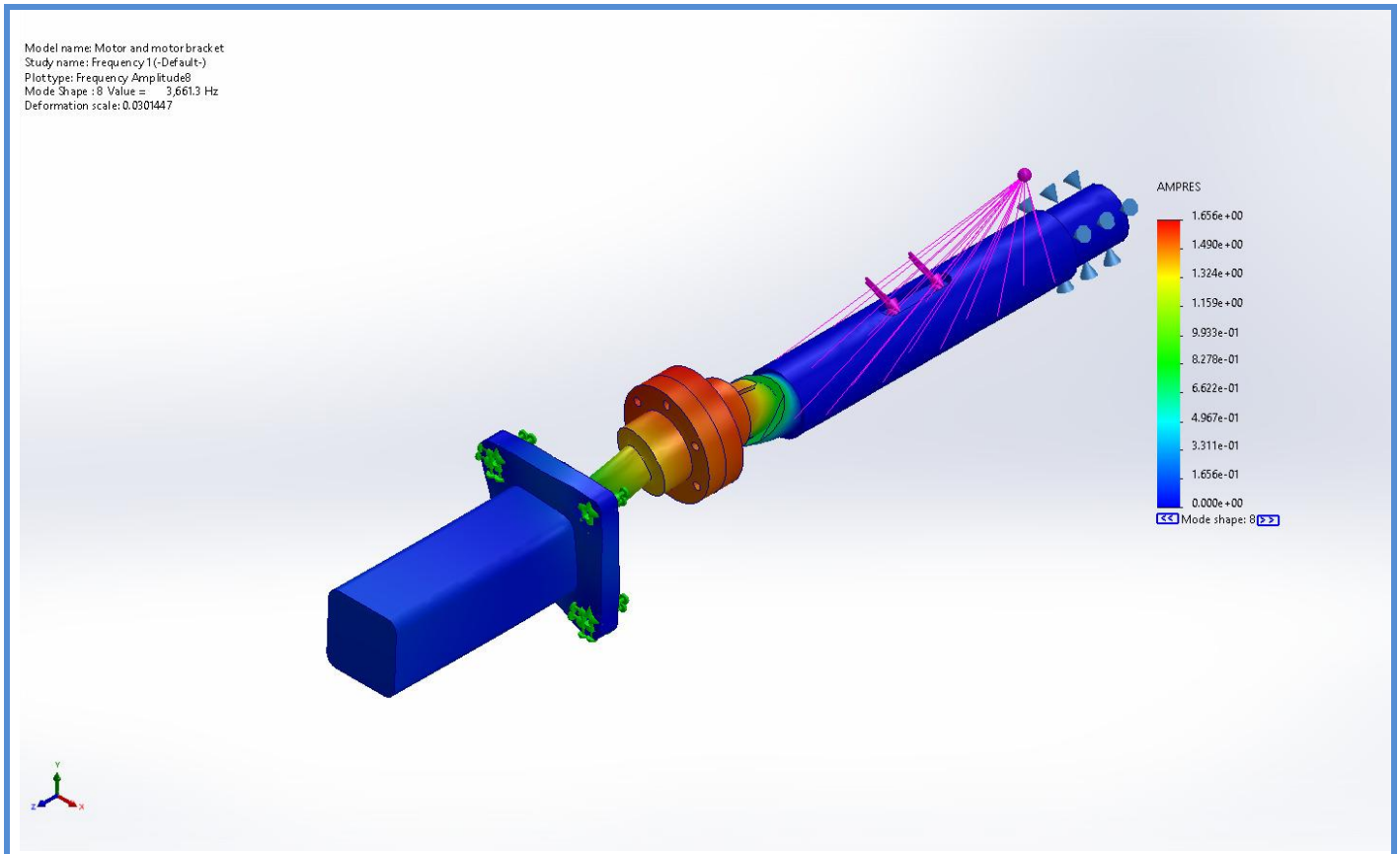

Motor and motor bracket-Frequency 1-Amplitude-Amplitude8

Name	Type	Min	Max
Amplitude9	AMPRES: Resultant Amplitude Plot for Mode Shape: 9(Value = 4,026.22 Hz)	0.000e+00 Node: 1	1.067e+00 Node: 1155

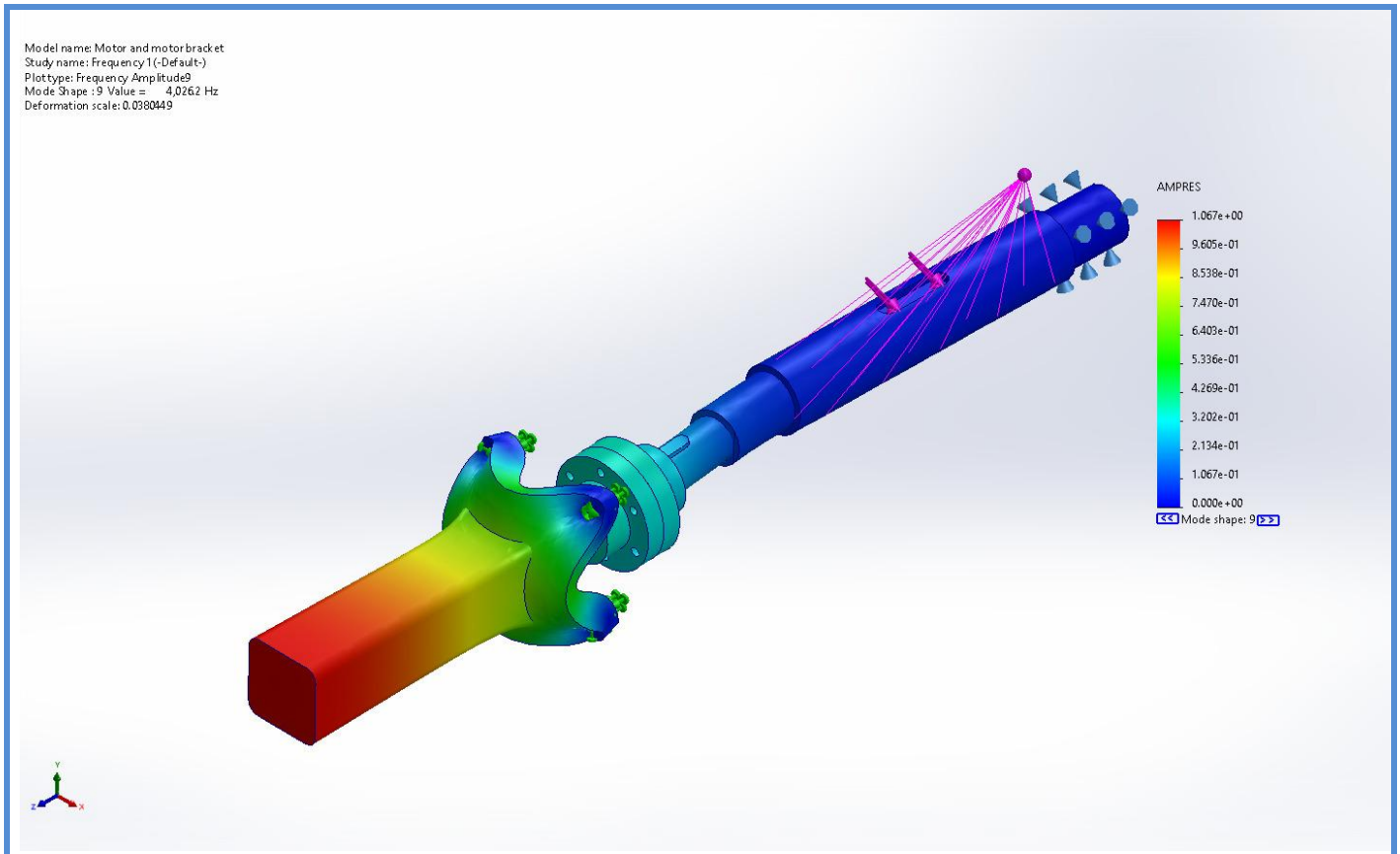

Motor and motor bracket-Frequency 1-Amplitude-Amplitude9

Name	Type	Min	Max
Amplitude10	AMPRES: Resultant Amplitude Plot for Mode Shape: 10(Value = 4,141.98 Hz)	0.000e+00 Node: 1	2.295e+00 Node: 1135

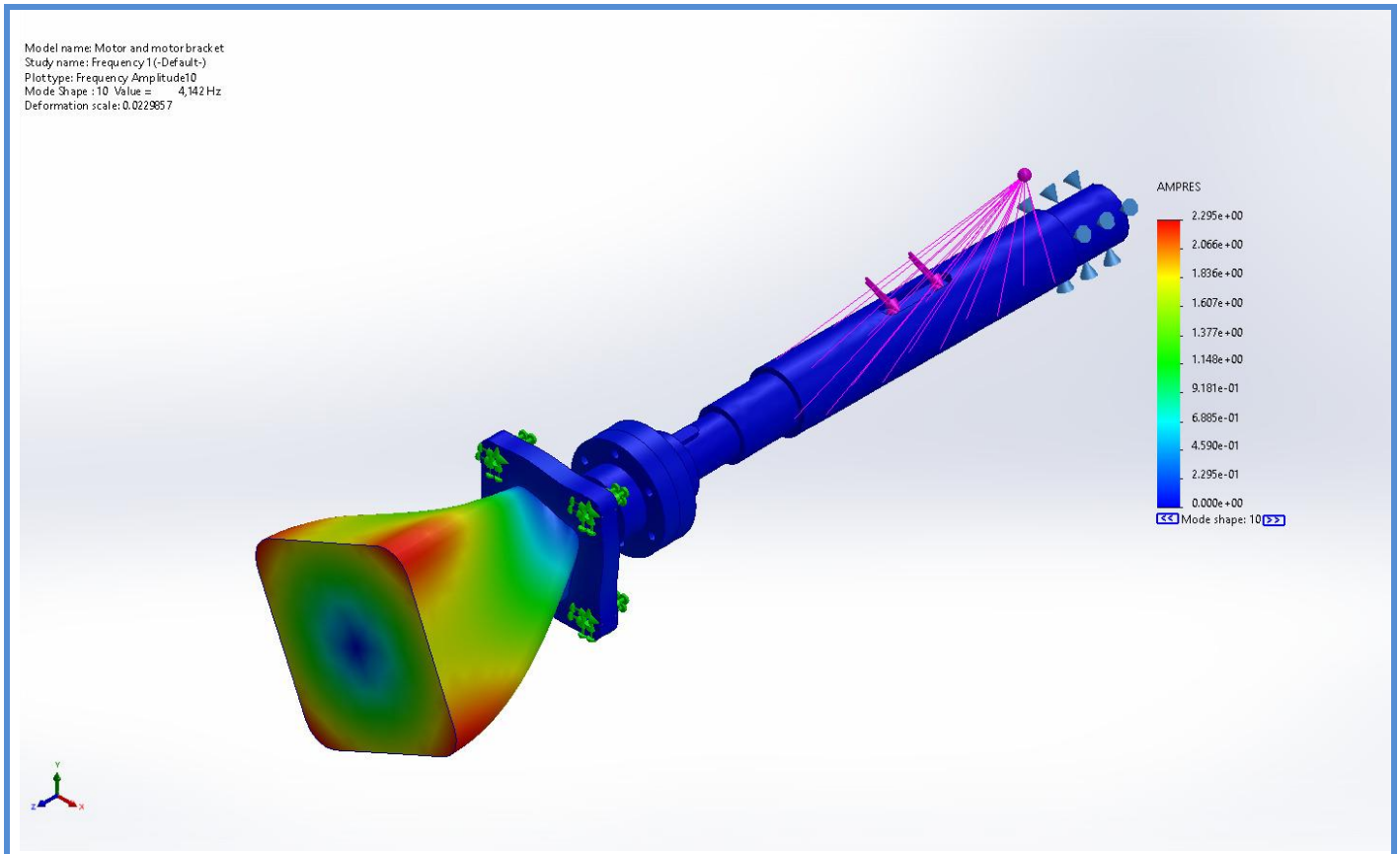

Motor and motor bracket-Frequency 1-Amplitude-Amplitude10

Name	Type	Min	Max
Amplitude11	AMPRES: Resultant Amplitude Plot for Mode Shape: 11(Value = 4,271.61 Hz)	0.000e+00 Node: 1	1.661e+00 Node: 13688

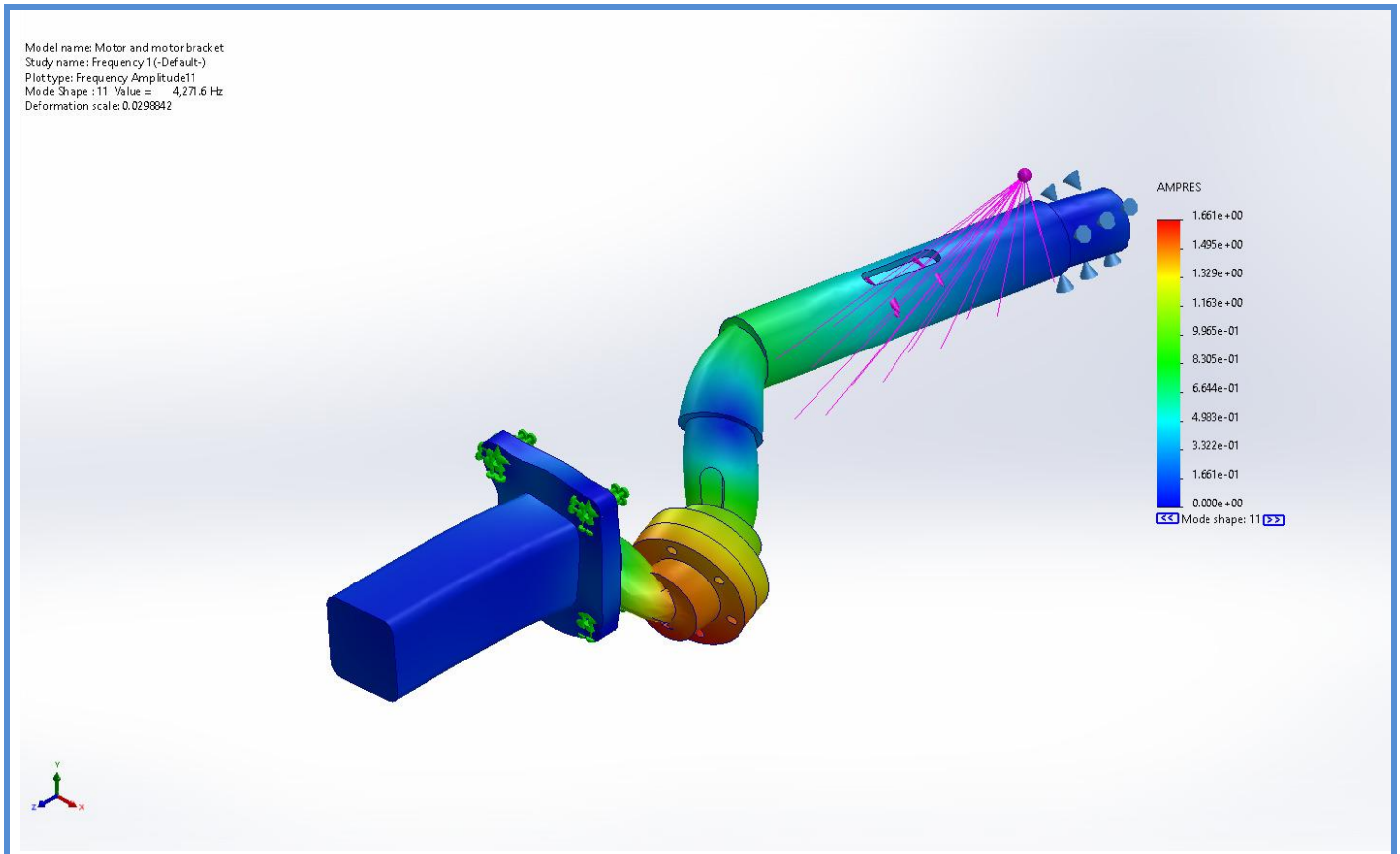

Motor and motor bracket-Frequency 1-Amplitude-Amplitude11

Name	Type	Min	Max
Amplitude12	AMPRES: Resultant Amplitude Plot for Mode Shape: 12(Value = 5,656.66 Hz)	0.000e+00 Node: 1	2.007e+00 Node: 13324

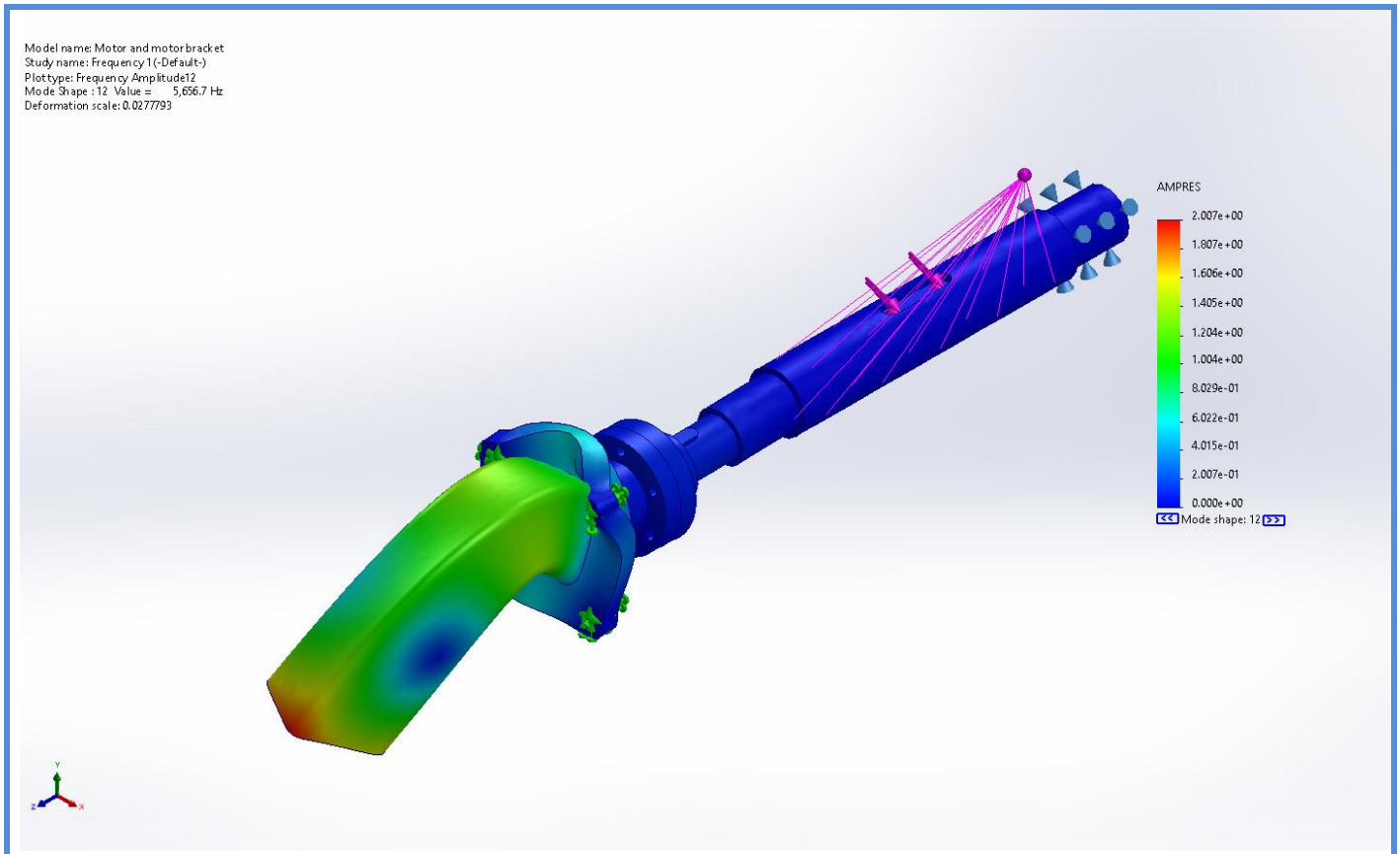

Motor and motor bracket-Frequency 1-Amplitude-Amplitude12

Name	Type	Min	Max
Amplitude13	AMPRES: Resultant Amplitude Plot for Mode Shape: 13(Value = 5,660.2 Hz)	0.000e+00 Node: 1	2.011e+00 Node: 4212

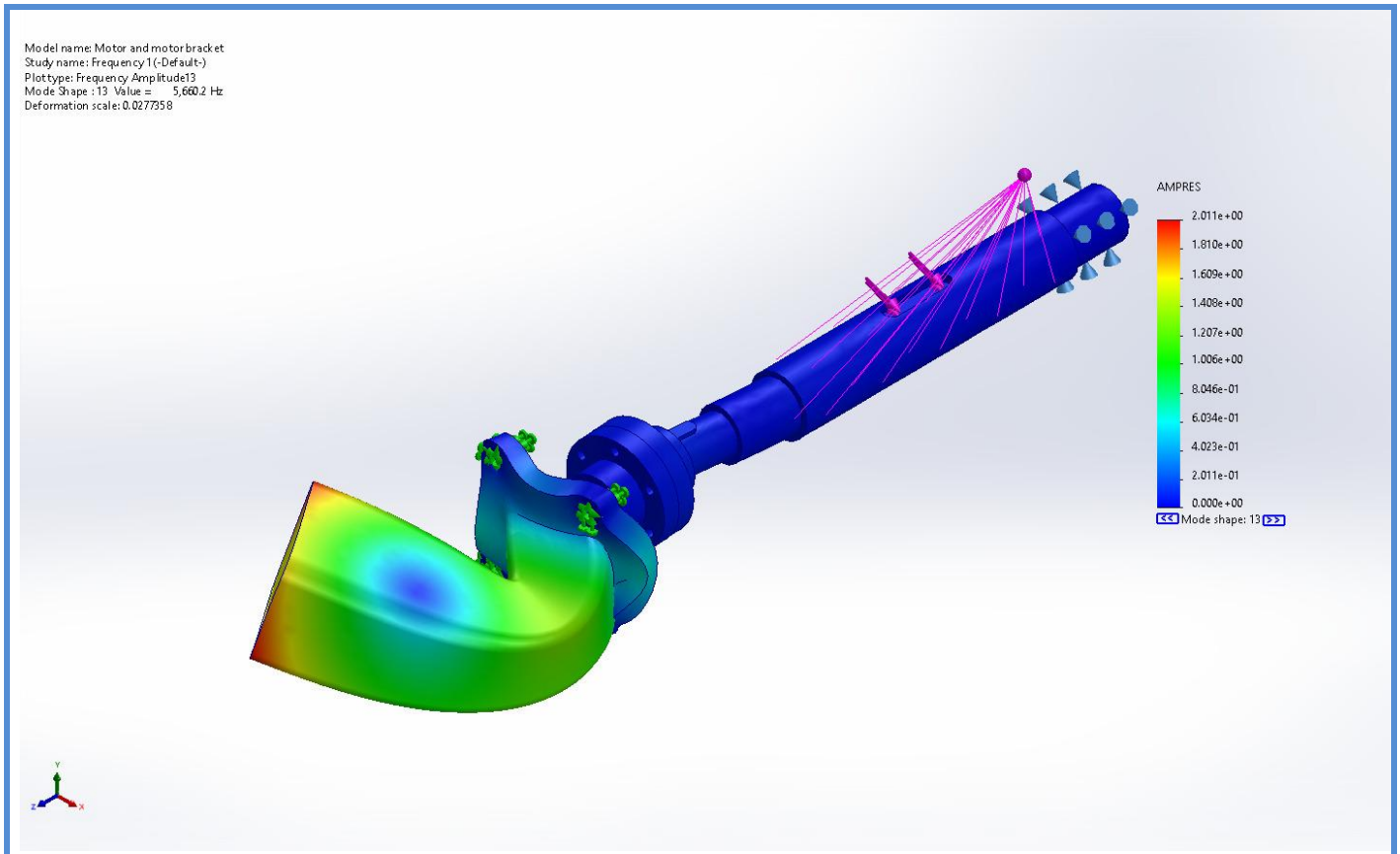

Motor and motor bracket-Frequency 1-Amplitude-Amplitude13

Name	Type	Min	Max
Amplitude14	AMPRES: Resultant Amplitude Plot for Mode Shape: 14(Value = 8,071.02 Hz)	0.000e+00 Node: 1	2.472e+00 Node: 13687

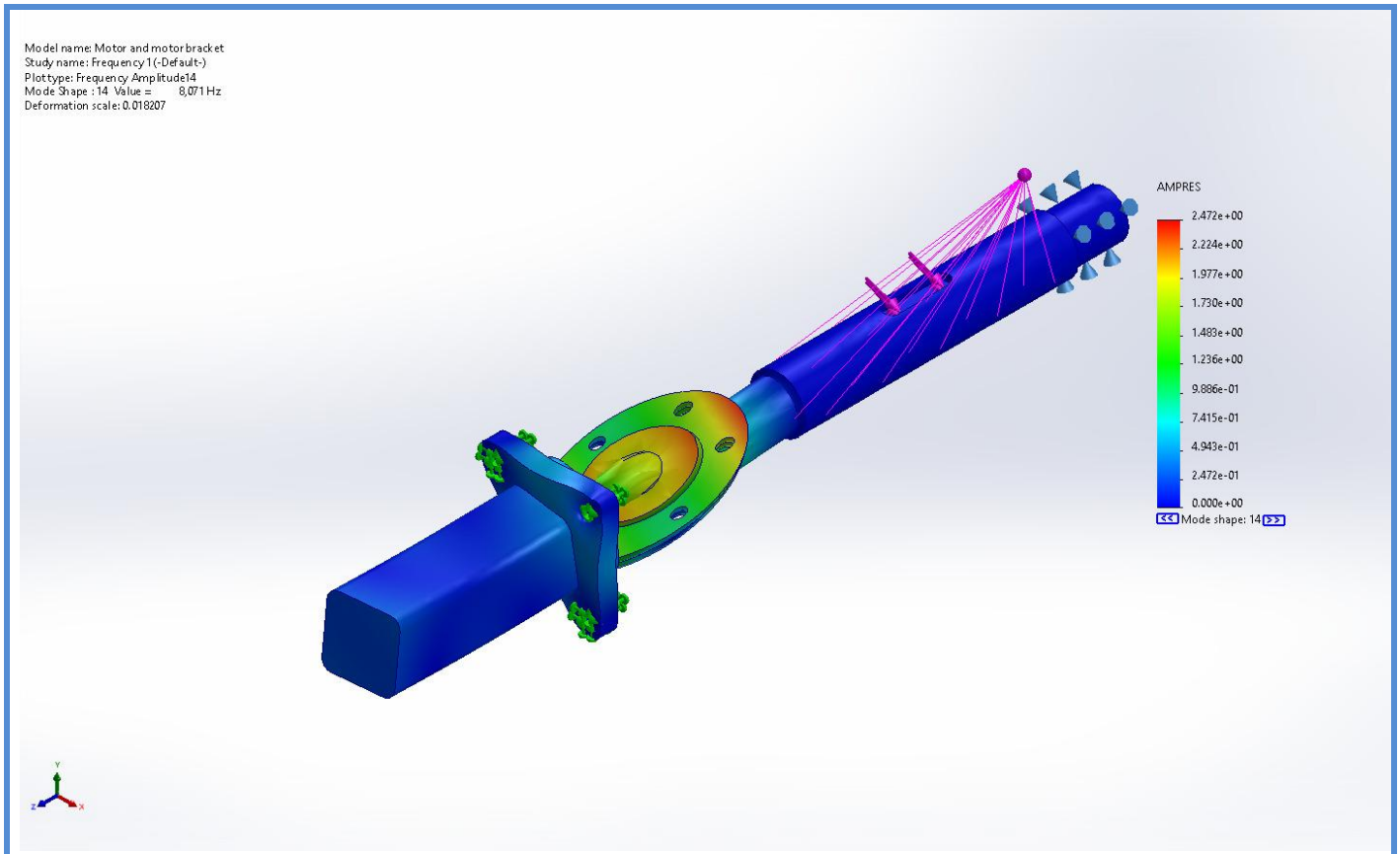

Motor and motor bracket-Frequency 1-Amplitude-Amplitude14

Name	Type	Min	Max
Amplitude15	AMPRES: Resultant Amplitude Plot for Mode Shape: 15(Value = 8,574.94 Hz)	0.000e+00 Node: 1	2.418e+00 Node: 13697

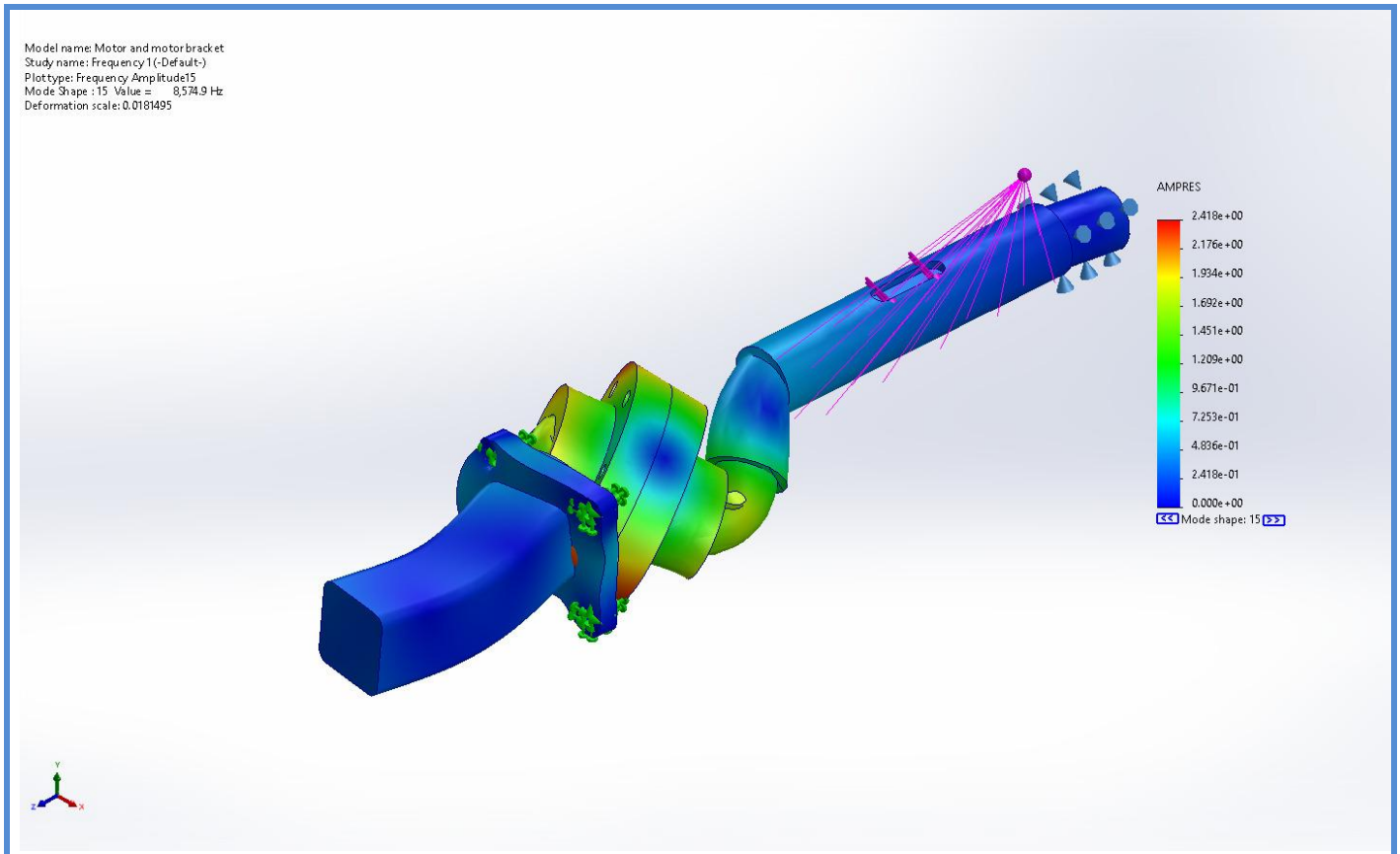

Motor and motor bracket-Frequency 1-Amplitude-Amplitude15

Name	Type	Min	Max
Amplitude16	AMPRES: Resultant Amplitude Plot for Mode Shape: 16(Value = 9,546.42 Hz)	0.000e+00 Node: 1	1.616e+00 Node: 27669

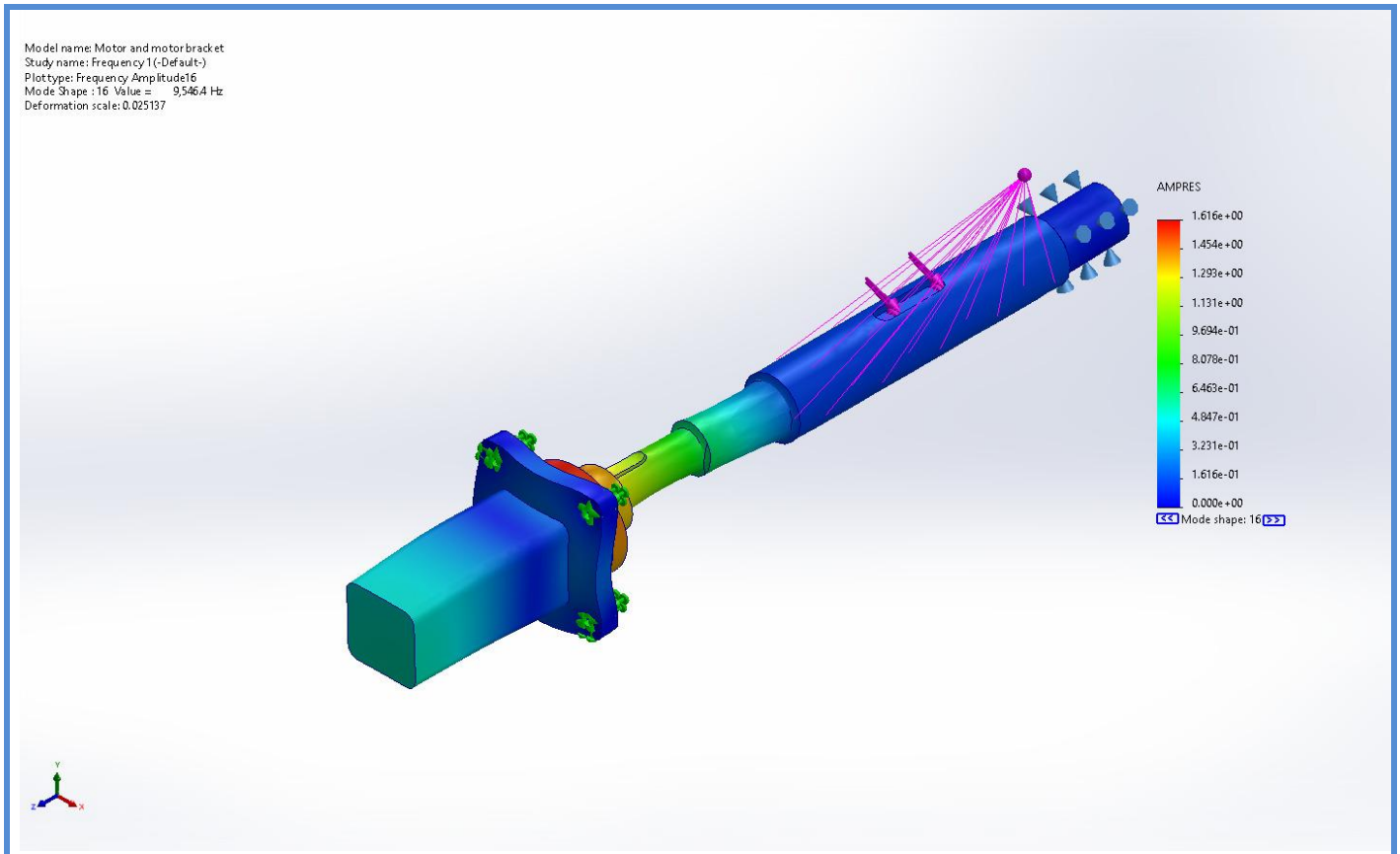

Motor and motor bracket-Frequency 1-Amplitude-Amplitude16

Name	Type	Min	Max
Amplitude17	AMPRES: Resultant Amplitude Plot for Mode Shape: 17(Value = 11,763.6 Hz)	0.000e+00 Node: 1	1.703e+00 Node: 13324

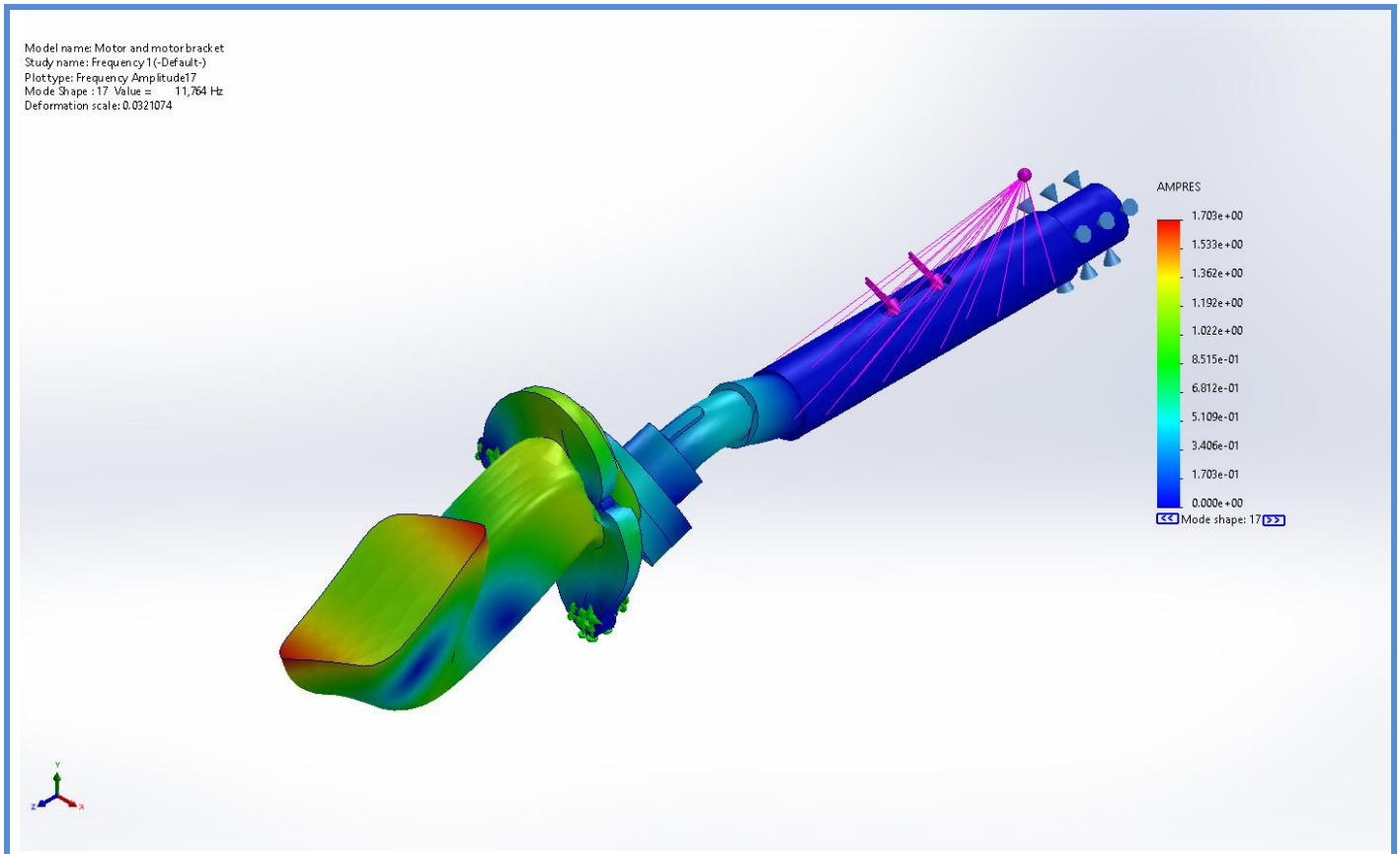

Motor and motor bracket-Frequency 1-Amplitude-Amplitude17

Name	Type	Min	Max
Amplitude18	AMPRES: Resultant Amplitude Plot for Mode Shape: 18(Value = 11,805 Hz)	0.000e+00 Node: 1	1.717e+00 Node: 12933

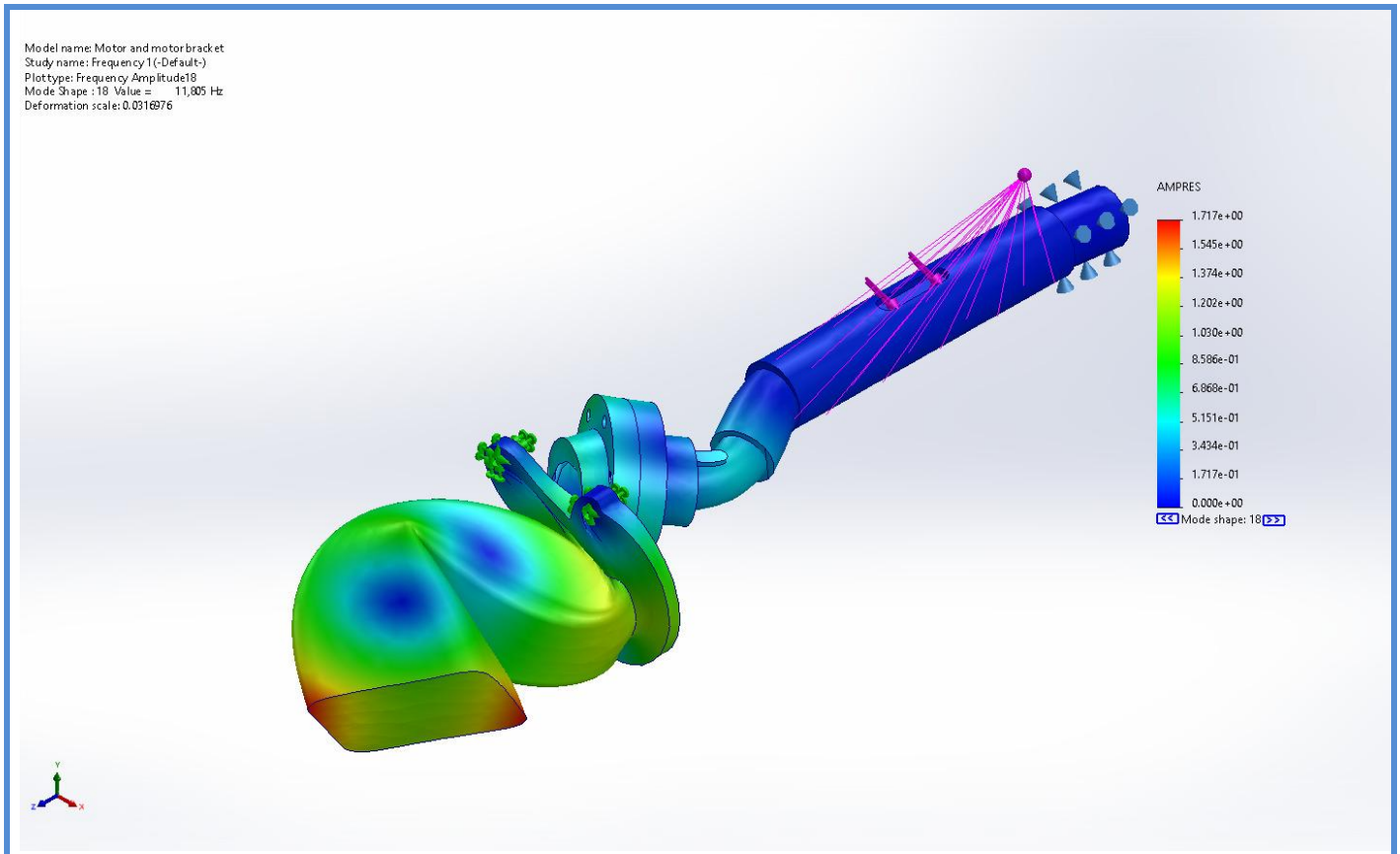

Motor and motor bracket-Frequency 1-Amplitude-Amplitude18

Name	Type	Min	Max
Amplitude19	AMPRES: Resultant Amplitude Plot for Mode Shape: 19(Value = 12,273.1 Hz)	0.000e+00 Node: 1	2.324e+00 Node: 1136

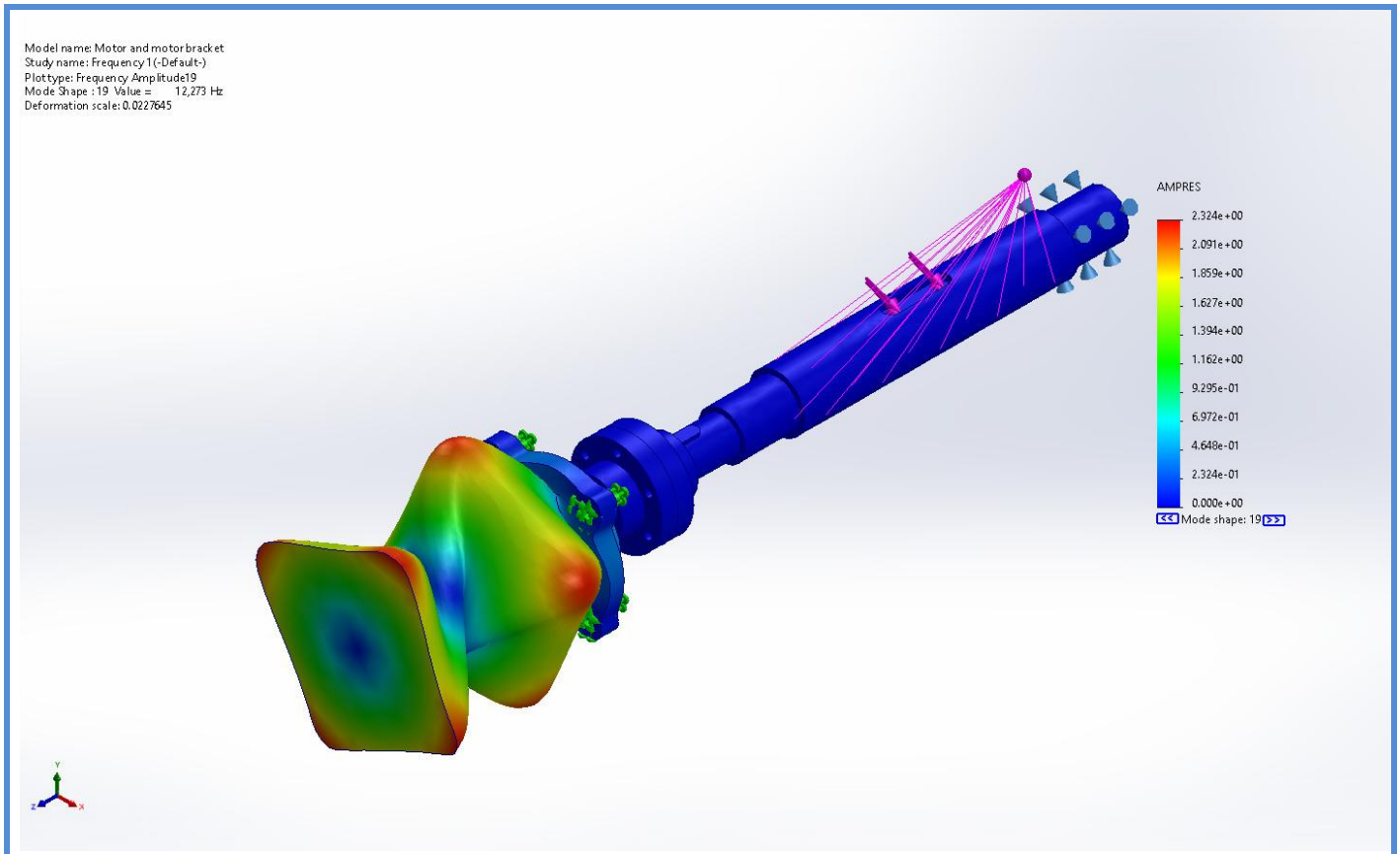

Motor and motor bracket-Frequency 1-Amplitude-Amplitude19

Name	Type	Min	Max
Amplitude20	AMPRES: Resultant Amplitude Plot for Mode Shape: 20(Value = 13,738.2 Hz)	0.000e+00 Node: 1	2.463e+00 Node: 387

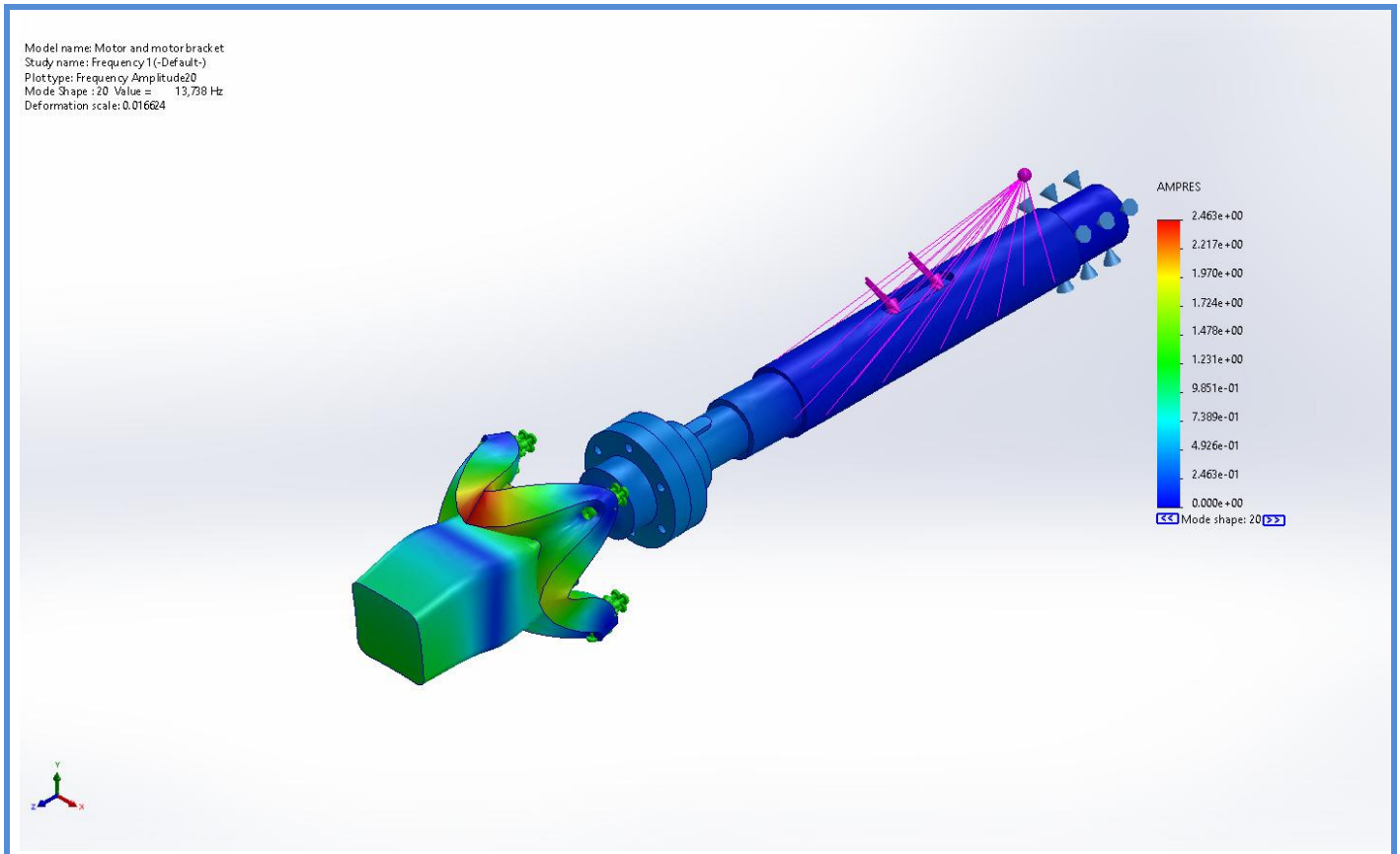

Motor and motor bracket-Frequency 1-Amplitude-Amplitude20

Mode List

Frequency Number	Rad/sec	Hertz	Seconds
1	45.67	7.2685	0.13758
2	307.62	48.959	0.020425
3	5,590.5	889.75	0.0011239
4	6,697.5	1,065.9	0.00093813
5	6,817.7	1,085.1	0.0009216
6	6,910	1,099.8	0.00090929
7	20,449	3,254.5	0.00030727
8	23,005	3,661.3	0.00027313
9	25,297	4,026.2	0.00024837
10	26,025	4,142	0.00024143
11	26,839	4,271.6	0.0002341
12	35,542	5,656.7	0.00017678
13	35,564	5,660.2	0.00017667

14	50,712	8,071	0.0001239
15	53,878	8,574.9	0.00011662
16	59,982	9,546.4	0.00010475
17	73,913	11,764	8.5008e-05
18	74,173	11,805	8.471e-05
19	77,114	12,273	8.1479e-05
20	86,319	13,738	7.279e-05

Mass Participation (Normalized)

Mode Number	Frequency(Hertz)	X direction	Y direction	Z direction
1	7.2685	0.63251	0.34093	4.9595e-07
2	48.959	0.12397	0.22902	0.62369
3	889.75	0.0036376	0.0019698	1.5308e-07
4	1,065.9	9.1009e-05	0.00027915	0.0024568
5	1,085.1	0.0086581	0.0027536	6.7695e-05
6	1,099.8	0.22157	0.41558	0.34986
7	3,254.5	1.7082e-06	3.6417e-06	5.3421e-09
8	3,661.3	0.00058552	0.0011456	7.7598e-06
9	4,026.2	6.6651e-06	3.8136e-05	0.013104
10	4,142	4.424e-07	3.3102e-07	4.7594e-07
11	4,271.6	0.00042747	0.00021154	5.2937e-05
12	5,656.7	0.00037742	0.002227	6.8451e-07
13	5,660.2	0.0022168	0.00037106	2.1129e-08
14	8,071	0.00033926	0.00046074	1.6963e-05
15	8,574.9	0.00096779	0.00054999	7.9264e-06
16	9,546.4	1.1757e-05	6.4358e-05	0.0029937
17	11,764	0.00024238	0.0012741	1.0658e-06
18	11,805	0.0010954	0.00016788	1.2438e-08
19	12,273	1.4751e-06	8.1876e-08	2.9155e-11
20	13,738	2.9137e-06	1.6748e-05	1.9731e-06
		Sum X = 0.99671	Sum Y = 0.99707	Sum Z = 0.99226

Conclusion